SPACE INVADERS

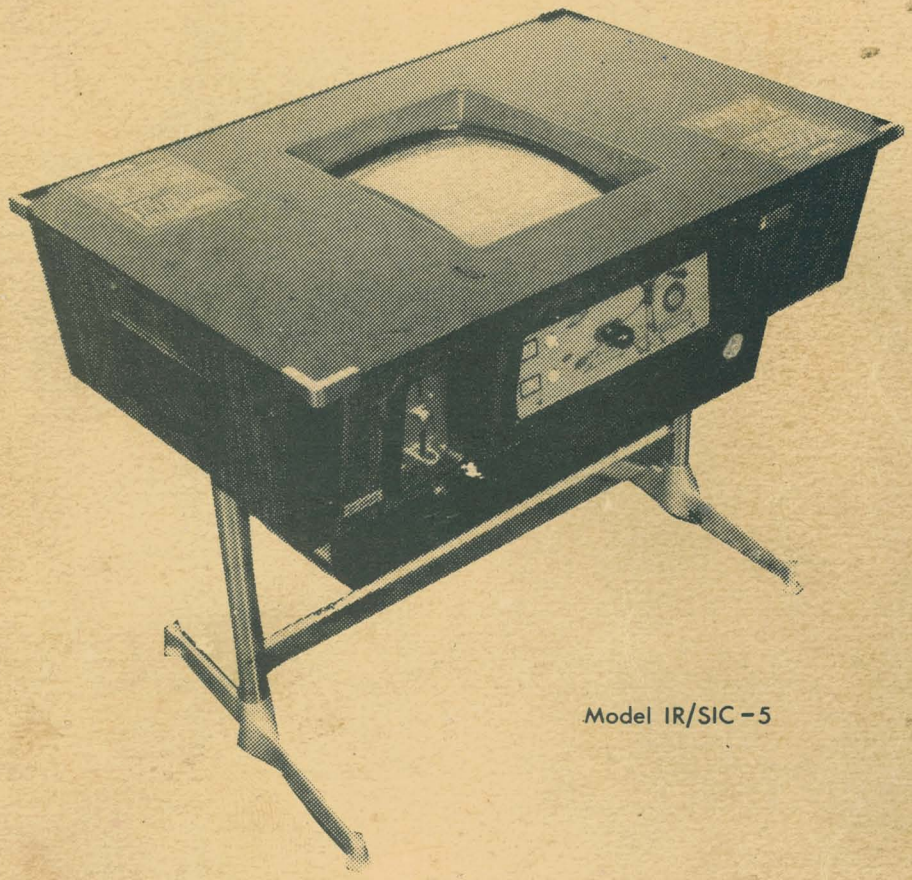

Model IR/SIC-5

Operation, Maintenance and Service Manual

INDOOR AMUSEMENT GAMES
LEISURE AND ALLIED INDUSTRIES

LEISURE & ALLIED INDUSTRIES

CORRESPONDENCE regarding this game should be addressed to:

LEISURE & ALLIED INDUSTRIES

34 PALMERSTON STREET,
PERTH, 6000

Telephone 328 3611
Telex AA92702

OR *Leisure & Allied Industries in your capital city*

Branches located at Sydney–Melbourne–Adelaide–Brisbane

TABLE OF CONTENTS

SECTION **A** — SERVICE INSTRUCTIONS

1. GENERAL
2. INSTALLATION
   - Initial Inspection
   - Positioning
   - Optional Adjustments
   - Switching On
3. HOW TO PLAY
4. MAINTENANCE
   - Primary
   - Basic Fault Fixing
   - Fault Finding Charts
   - Monitor Adjustment Diagram

SECTION **B** — PARTS CATALOGUE

1. HARDWARE
2. CONTROL PANELS
3. TABLE TOP
   ADJUSTABLE STAND
4. COIN MECHANISM
   P.C. BOARDS

SECTION **C** — TECHNICAL DETAILS

1. CIRCUIT DIAGRAMS

The TABLE OF CONTENTS gives the composition of each section. The numbers appearing there, refer to sub sections. These numbers can be found near the top outer-corner edge of each page, they do not correspond to the page number.

LIST OF ILLUSTRATIONS

FIG 1 ..... GENERAL VIEW ..... page 4
FIG 2 ..... GENERAL VIEW LID OPEN ..... page 5
FIG 3 ..... DO NOT POSITION ..... page 7
FIG 4 ..... DO POSITION ..... page 8
FIG 5 ..... OPTIONAL ADJUSTMENTS ..... page 9
FIG 6 ..... MONITOR DISPLAYS ..... page 12
FIG 7 ..... MONITOR P.C. BOARD ADJUSTMENT ..... page 17
FIG 8 ..... HARDWARE ..... page 19
FIG 9 ..... CONTROL PANELS ..... page 21
FIG 10 ..... TABLE TOP ASSEMBLY ..... page 23
FIG 11 ..... ADJUSTABLE STAND ..... page 23
FIG 12 ..... COIN MECHANISM ..... page 25
FIG 13 ..... P.C. BOARDS ..... page 25

1 GENERAL

THE SPACE INVADERS ARE COMING!

Waves of invaders sweep down the screen towards the player's base. The invaders rain missiles down upon the fortresses and at the player's tank. The only defence, is to destroy the invaders.

THE SPACE INVADERS MUST BE ELIMINATED!

Space invaders is incorporated in a cocktail table, with an adjustable stand, for ease of comfort and maintenance. The tempered glass top reduces the possibility of spilled liquid entering the cabinet. The attractive wood veneer cabinet permits the cocktail table to blend with most surroundings.

SPACE INVADERS, a space adventure game distributed by LEISURE AND ALLIED INDUSTRIES.

This manual is presented as an aid for owner/operators. To assist in using the manual it has been divided into three main sections:

A. SERVICE INSTRUCTIONS

B. PARTS CATALOGUE

C. TECHNICAL DETAILS

SECTION A

SERVICE INSTRUCTIONS

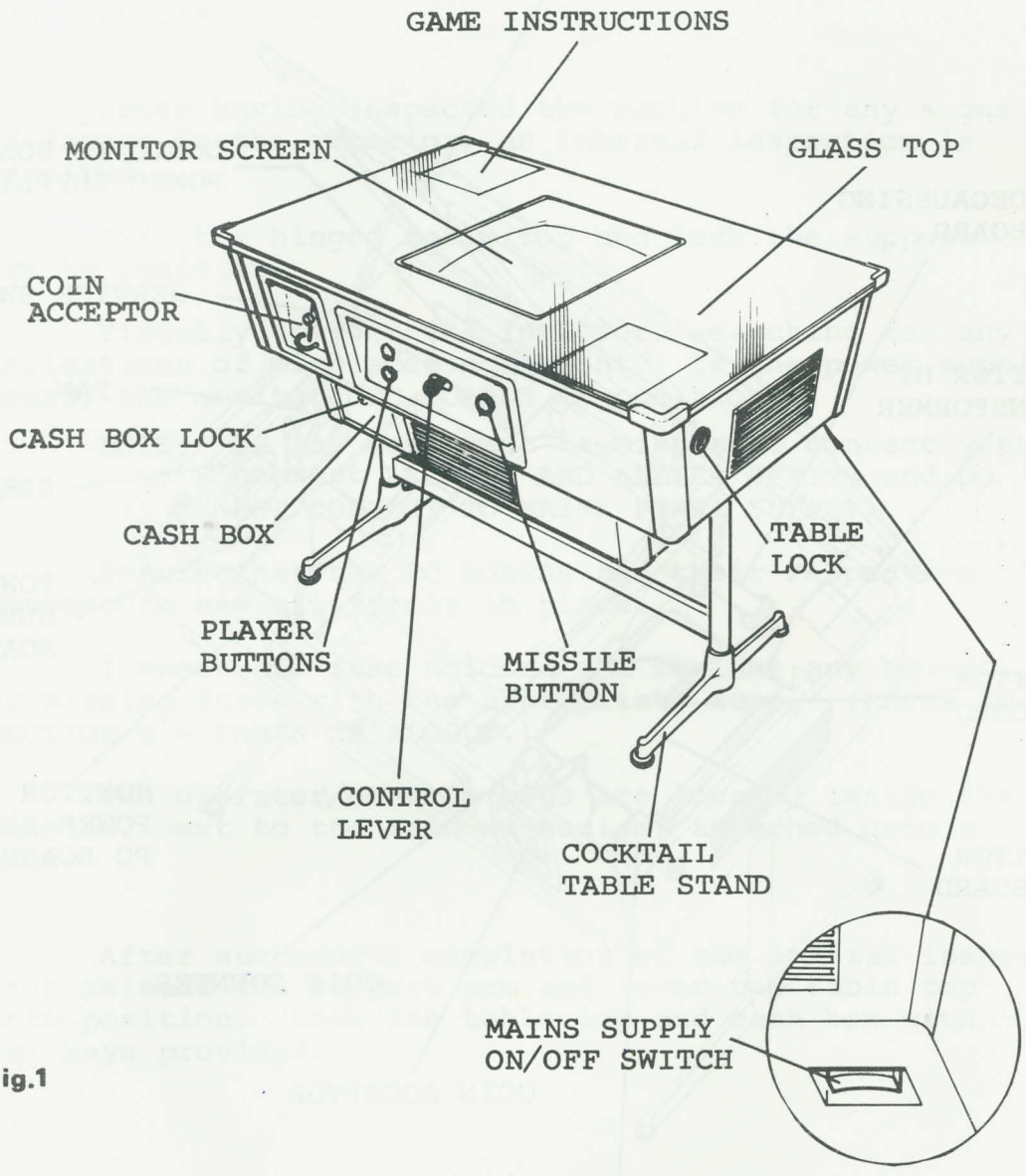

fig.1

Dimensions	W x D x H 830x500xAdj	Power Supply	240V ± 10%
Game Cost	Adjustable	Monitor	356mm (14)

1 GENERAL

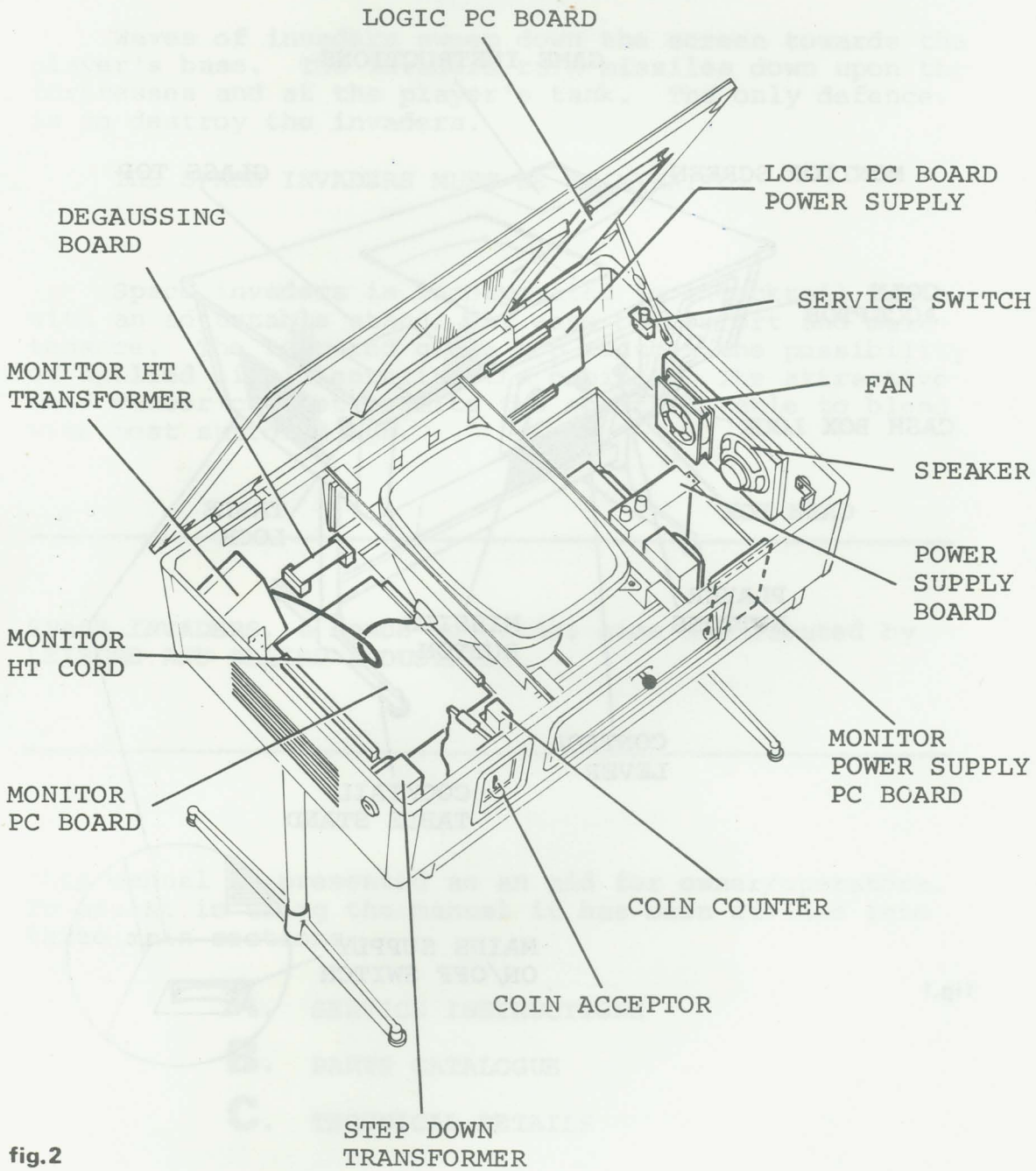

fig.2

INSTALLATION 2

INITIAL INSPECTION

On receiving the SPACE INVADER examine it for any damage that may have been caused during transportation, such as broken panels, cracked glass table top or missing controls.

After having inspected the machine for any signs of damage to the exterior, an internal inspection is required.

Lift the hinged table top and lock the support arm in position.

Visually inspect the interior, searching for any indications of misplaced equipment. Is the power supply board, the monitor, PC BOARDS in position?

NOTE: If any equipment is misplaced contact your nearest LEISURE AND ALLIED OFFICE and DO NOT CONNECT TO MAINS POWER SUPPLY.

Ensure that the PC BOARDS and their respective connectors are all firmly in place.

Inspect all fuse holders and replace any broken or missing fuses with the appropriate fuse. (REFER to SECTION B - PARTS CATALOGUE.)

The operator/owner's keys are located inside the machine, next to the coin mechanism, attached onto a hook.

After successful completion of the initial inspection release the support arm and lower the table top into position. Lock the table top and cash box with the keys provided.

2 INSTALLATION

POSITIONING

To assist in achieving the optimum life from the SPACE INVADER there are a number of DO'S and DO NOT'S to be followed during installation.

DO NOT handle the machine roughly as this may cause damage.

DO NOT install the machine outdoors.

DO NOT install the machine where it will hamper the use of emergency exits or equipment.

E.G. Avoid installing in front of fire exits or fire protection equipment.

AVOID installing where direct sunlight may fall upon the machine.

AVOID installing where dust accumulates.

AVOID installing in moist or humid places.

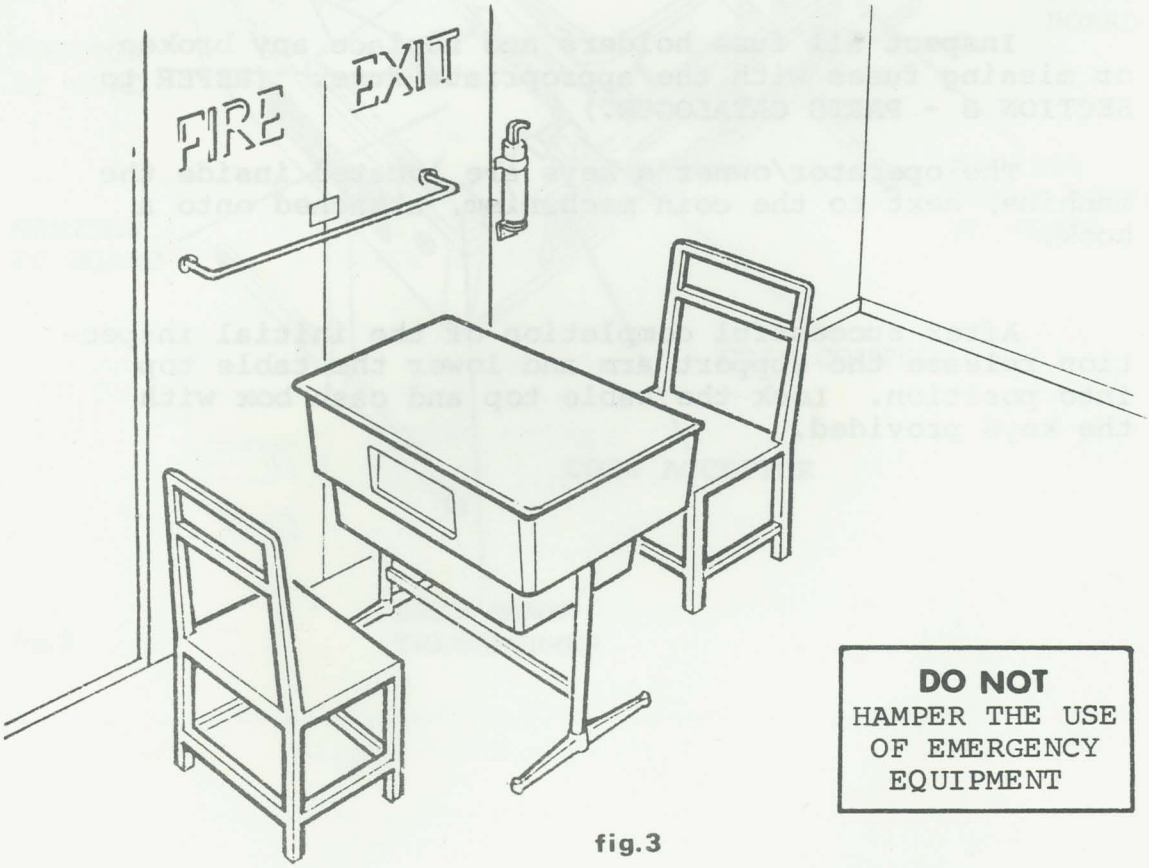

fig.3

DO install indoors.

DO install on a solid flat surface without undue movement or vibration

ALLOW sufficient space opposite the control panels, for players.

ADJUST the stand of the cocktail table to a suitable height for operation (REFER - SECTION B - PARTS CATALOGUE - Adjustable Stand.)

ARRANGE the mains cord so as not to hinder the movement of players.

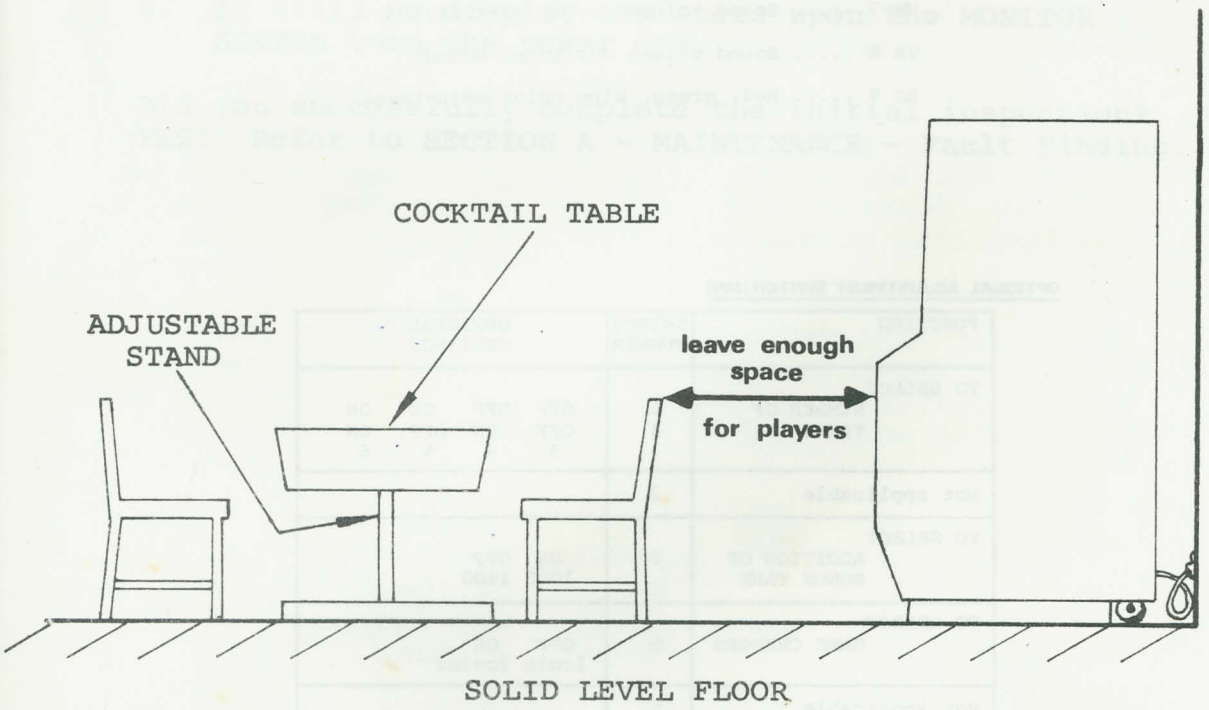

fig.4

2 INSTALLATION

OPTIONAL ADJUSTMENTS

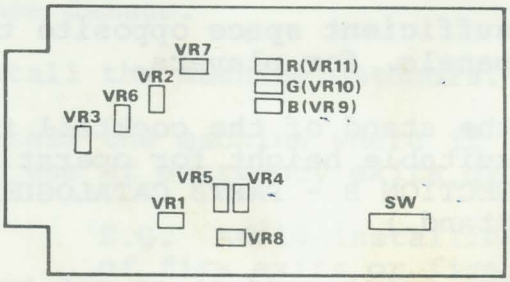

VR 1 ..... Sound volume for beam explosion

VR 2 ..... Sound volume for beam shooting

VR 3 ..... Sound volume for invader's disappearing

VR 4 ..... Sound volume for additional beam cannon

VR 5 ..... Sound volume for invader's marching

VR 6 ..... Sound volume for UFO explosion

VR 7 ..... Sound volume for invader flying

VR 8 ..... Sound volume for total sounds

RG 9 ..... Red, green, blue color adjustment

OPTIONAL ADJUSTMENT SWITCH (SW)

FUNCTION	SWITCH NUMBER	OPTIONAL SETTINGS
TO SELECT NUMBER OF TANKS	1 4	OFF OFF ON ON OFF ON OFF ON 3 4 5 6
Not applicable	2	
TO SELECT ADDITION OF BONUS TANK	3	ON OFF 1000 1500
TO SELECT GAME CHARGES	5	OFF ON 1coin 2coins
Not applicable	6	
TO SELECT NUMBER OF MISSILES	7 8	ON ON OFF OFF ON OFF ON OFF FEW FEW MANY MANY

fig.5

SWITCHING ON

STEPS	ACTION TAKEN
1.	Plug in the mains power cord. Arrange the cord so it does not hinder the movement of players.
2.	Turn the power ON.
3.	After a few seconds the display should register upon the MONITOR SCREEN.
4.	If no display registers upon the MONITOR SCREEN turn the power OFF and ON and wait a few seconds.
5.	If no display registers repeat STEP 4 a few times.
6.	If still no display registers upon the MONITOR SCREEN turn the power OFF.

Did you successfully complete the initial inspection?
YES! Refer to SECTION A - MAINTENANCE - Fault Finding.

3

HOW TO PLAY

1. Insert coin(s).

2. Push one player or two player selection button as desired to commence.

3. Use the control lever to move your tank across the screen to the right or to the left.

4. Push the firing button when you wish to destroy an invader.

5. If the player's tank is hit by an invader's missile it is destroyed and the next tank becomes available.

6. The player may hide behind the fortresses to evade destruction from falling missiles.

7. There are four different types of space invaders. Each registers a different value when destroyed.

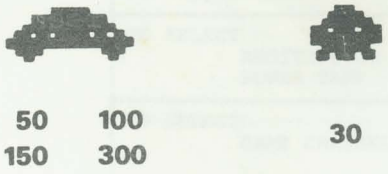

50 100
150 300

30

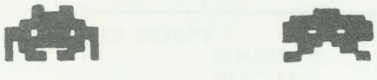

20

10

8. As the number of enemy invaders decrease, the remainder move faster to avoid the player's missiles.

9. If all the space invaders are destroyed the game resets. Now a new more difficult pattern of invaders appears to test the player's skill.

10. After a player achieves a certain score (REF. INSTALLATION - Optional Adjustments) an extra tank is awarded.

11. If all the player's tanks are destroyed, or the invaders overrun the fortresses, or the player's time is exhausted, the game is over.

12. When two players are participating and the first player's tank is destroyed, the game resets for the second player to commence. Alternating between players continues until the destruction of both player's tanks.

13. The five highest scores of the day are recorded and displayed on the screen.

HOW TO PLAY

MONITOR SCREEN DISPLAY

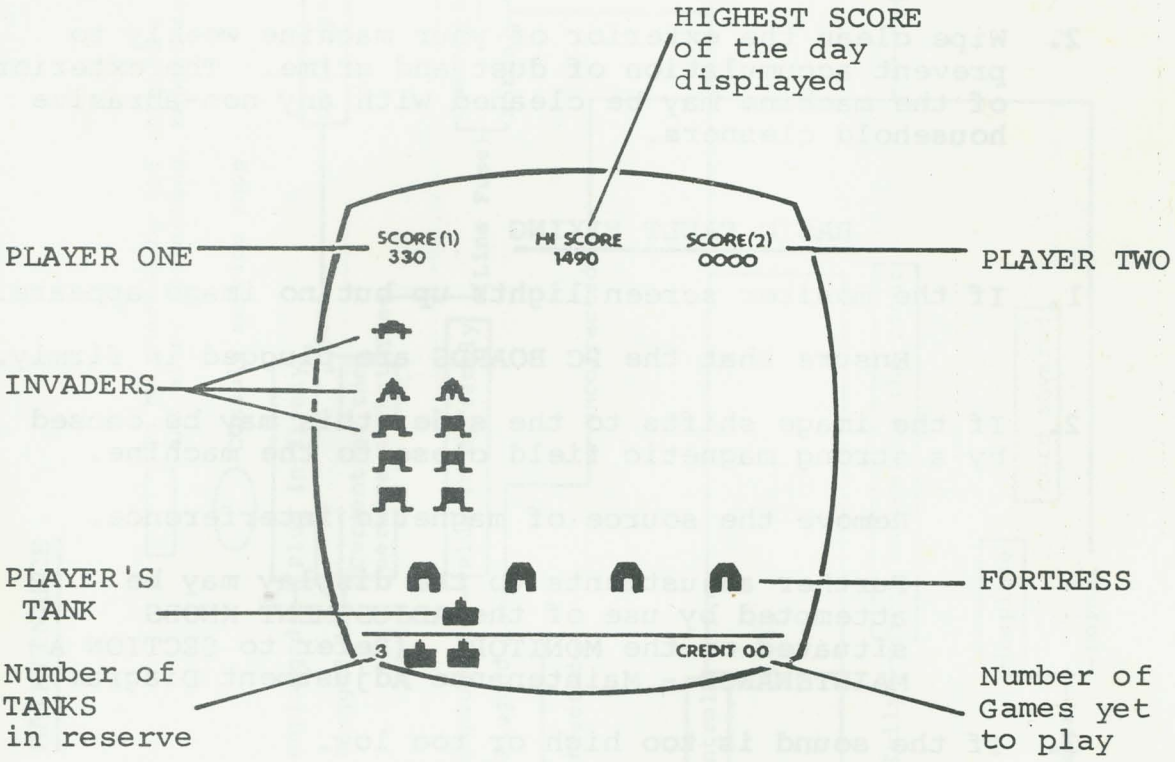

FIVE HI SCORE DISPLAY

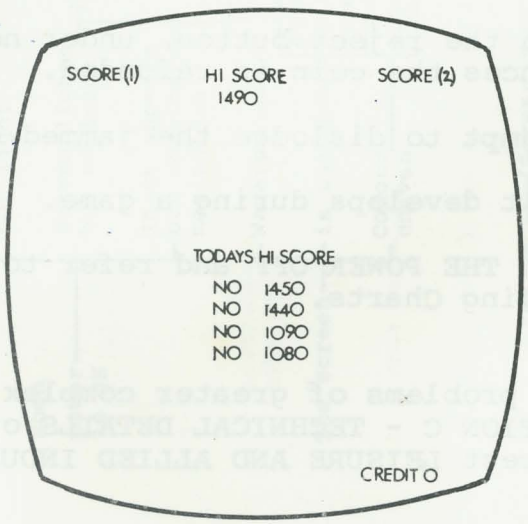

fig.6

4

MAINTENANCE

PRIMARY

1. Inspect your machine daily to ascertain if a fault may have occurred since the previous inspection.

2. Wipe clean the exterior of your machine weekly to prevent accumulation of dust and grime. The exterior of the machine may be cleaned with any non-abrasive household cleaners.

BASIC FAULT FIXING

1. If the monitor screen lights up but no image appears.

   Ensure that the PC BOARDS are plugged in firmly.

2. If the image shifts to the side, this may be caused by a strong magnetic field close to the machine.

   Remove the source of magnetic interference.

   Further adjustments to the display may be attempted by use of the ADJUSTMENT KNOBS situated on the MONITOR. (Refer to SECTION A- MAINTENANCE - Maintenance Adjustment Diagram.)

3. If the sound is too high or too low.

   Adjustment is by the volume control knobs situated inside the machine (Refer to SECTION A- MAINTENANCE - Maintenance Adjustment Diagram.)

4. If a coin cannot be inserted.
   Perhaps the coin box is full, or the coin may be jammed.

   Push the reject button, under normal circumstances the coin is refunded.

   Attempt to dislodge the jammed coin.

5. If a fault develops during a game.

   TURN THE POWER OFF and refer to the Fault Finding Charts.

NOTE: For problems of greater complexity refer to SECTION C - TECHNICAL DETAILS or consult your nearest LEISURE AND ALLIED INDUSTRIES Office.

FAULT FINDING CHART

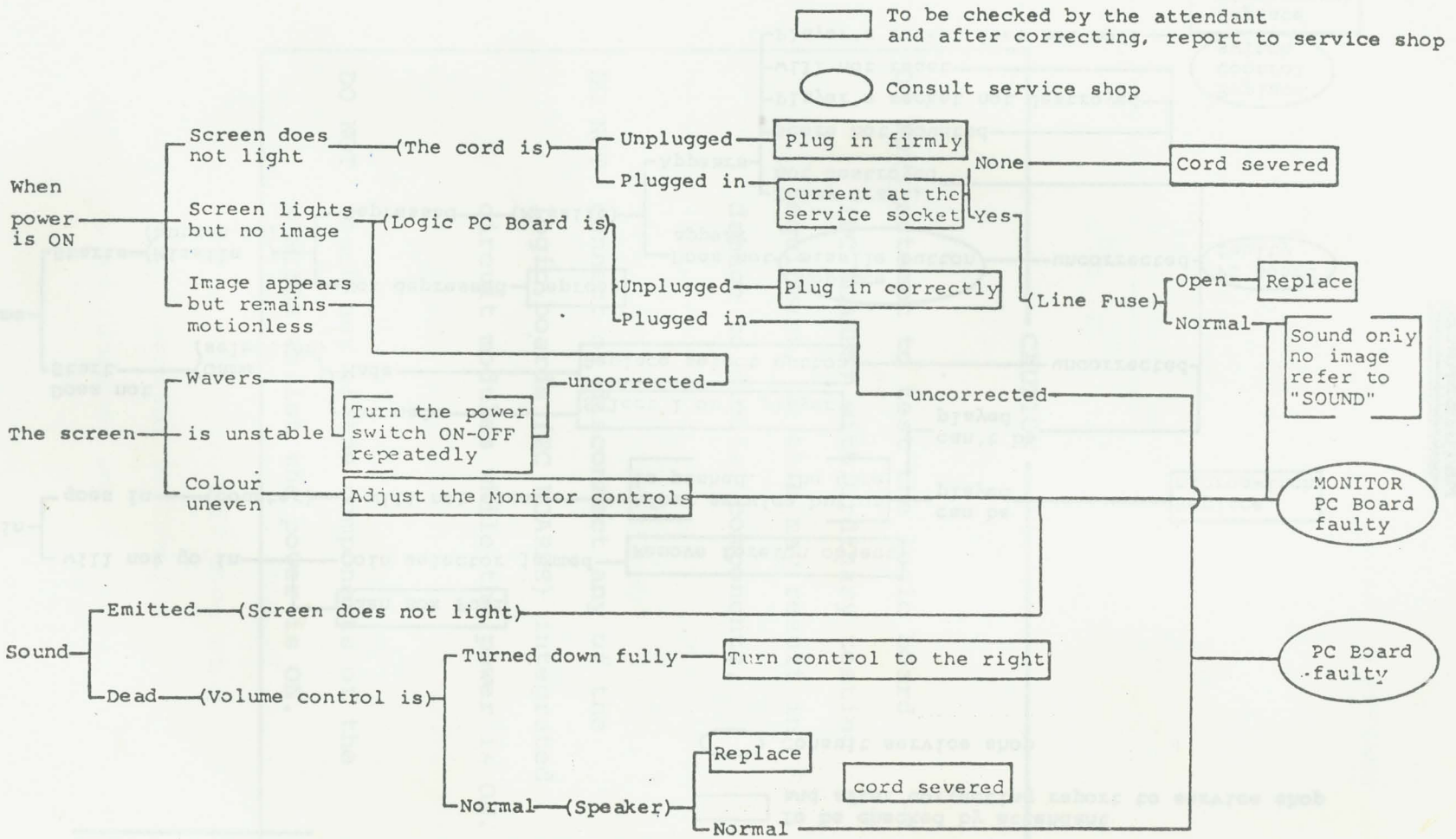

MAINTENANCE

FAULT FINDING CHART

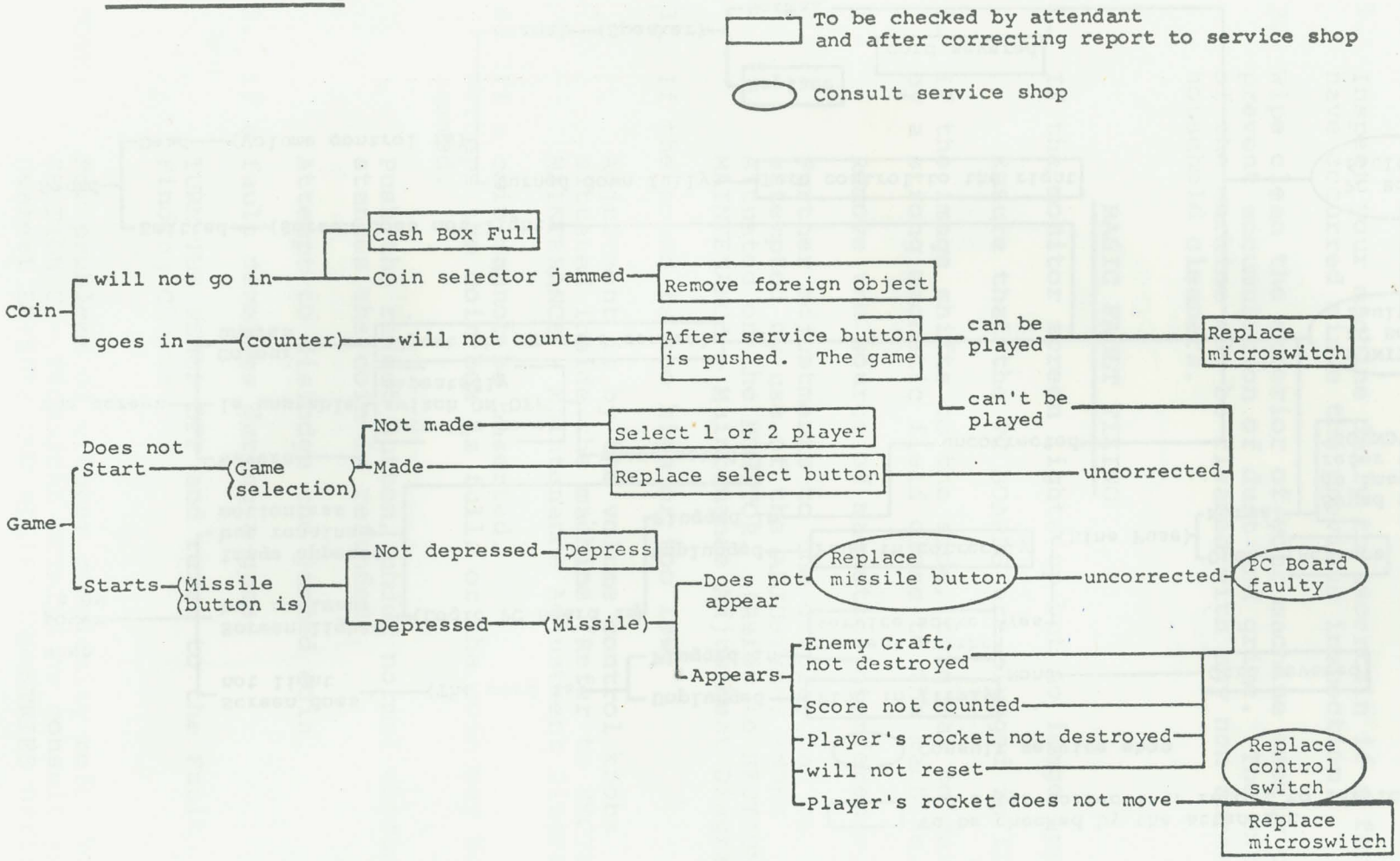

CAUTION

DO NOT attempt to test the logic board (PC BOARDS) with ordinary testing equipment, as this may result in damage to digital components.

DO NOT connect or disconnect any of the logic boards (PC BOARDS) integrated circuit modules while the power is ON.

DO NOT touch any of the components of the MONITOR whilst the power is ON.

MONITOR P C BOARD ADJUSTMENT

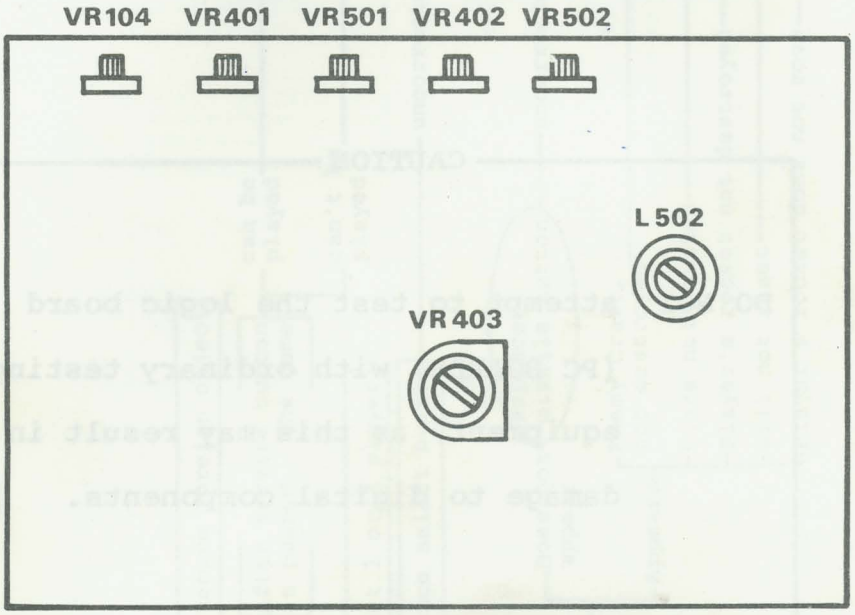

VR 104 ..... To adjust the brightness of the monitor display

VR 401 ..... To prevent the display from streaming, up or down

VR 501 ..... To adjust the skew strips of the monitor display

VR 402 ..... To move the display up or down

VR 502 ..... To move the display right or left

VR 403 ..... To adjust the horizontal width of the display

L 502 ..... To adjust the vertical height of the display

SECTION B

The purpose of this section is to provide the owner/operator with the necessary information for ordering replacement parts.

When ordering parts give the part number, part name, machine and game type. This will help to avoid confusion and error in your order.

1 PARTS CATALOGUE

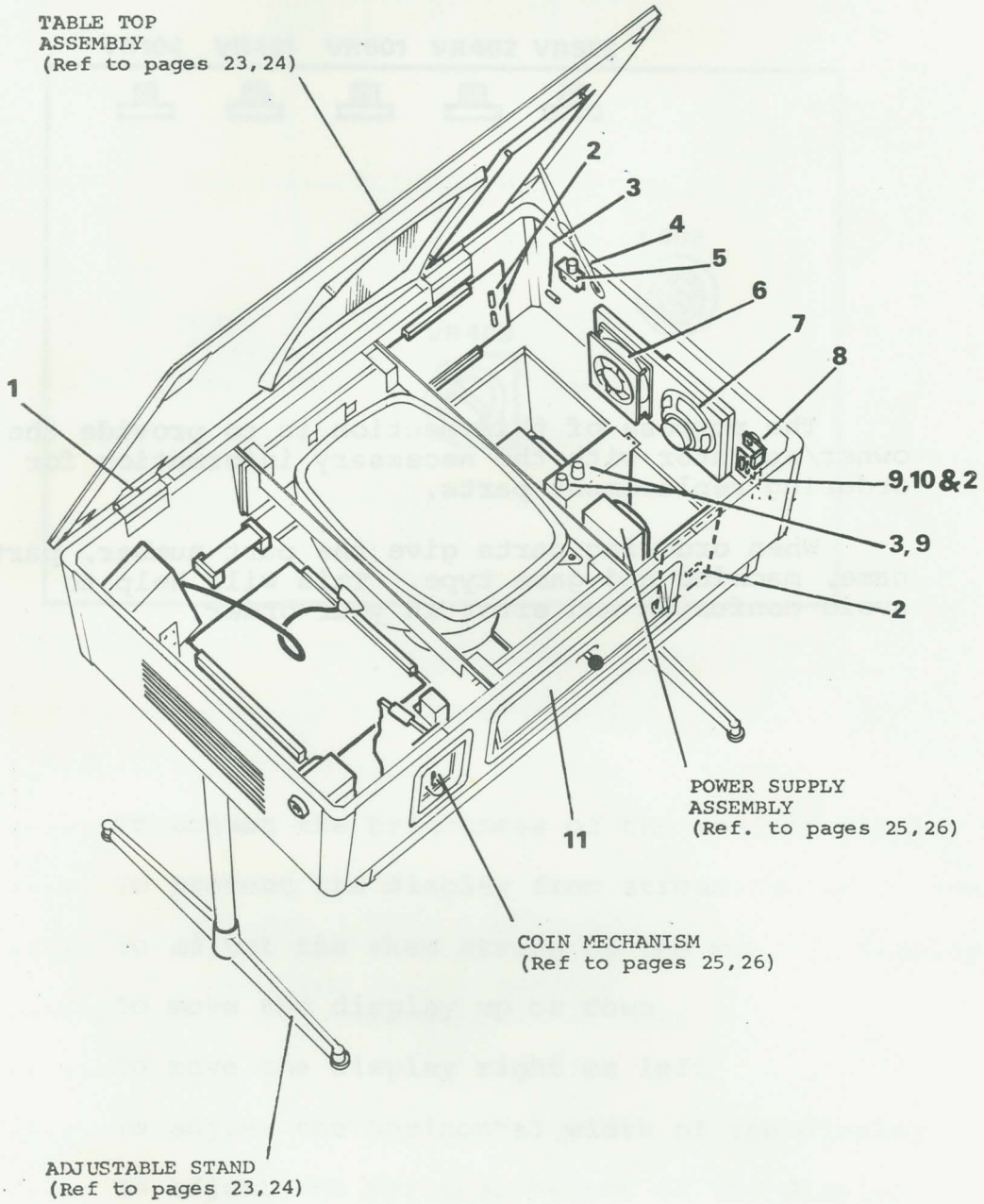

fig. 8

PARTS CATALOGUE

HARDWARE

The numerals presented on the opposite page refer to hardware items.

Hardware cover those items that may need replacement during the normal operational life of the machine. These items may be replaced in situ by the owner/operator. Generally the replacement of hardware items require the minimum of tools i.e. screw driver, phillip head screw driver, socket spanner and sockets.

The parts listed are obtainable from LEISURE AND ALLIED INDUSTRIES.

Item	Part Number	Description	No. Per Unit
1	GV0086	Hinge	2
2	GV0200	Fuse 1amp	3
3	GV0201	Fuse 2amp	3
4	GV0202	Lid Stay	1
5	GV0203	Inhibiting Switch	1
6	GV0159	Fan	1
7	GV0141	Speaker	1
8	GV0087	Lock and key - table top	2
9	GV0157	Fuse 5amp	2
10	GV0204	Fuse 1.5amp	1
11		Control Panel (Ref. to Page 21, 22)	

FUSE REPLACEMENT

For continued protection of the game, as well as the safety of players, fuses must be replaced only with fuses of identical ratings.

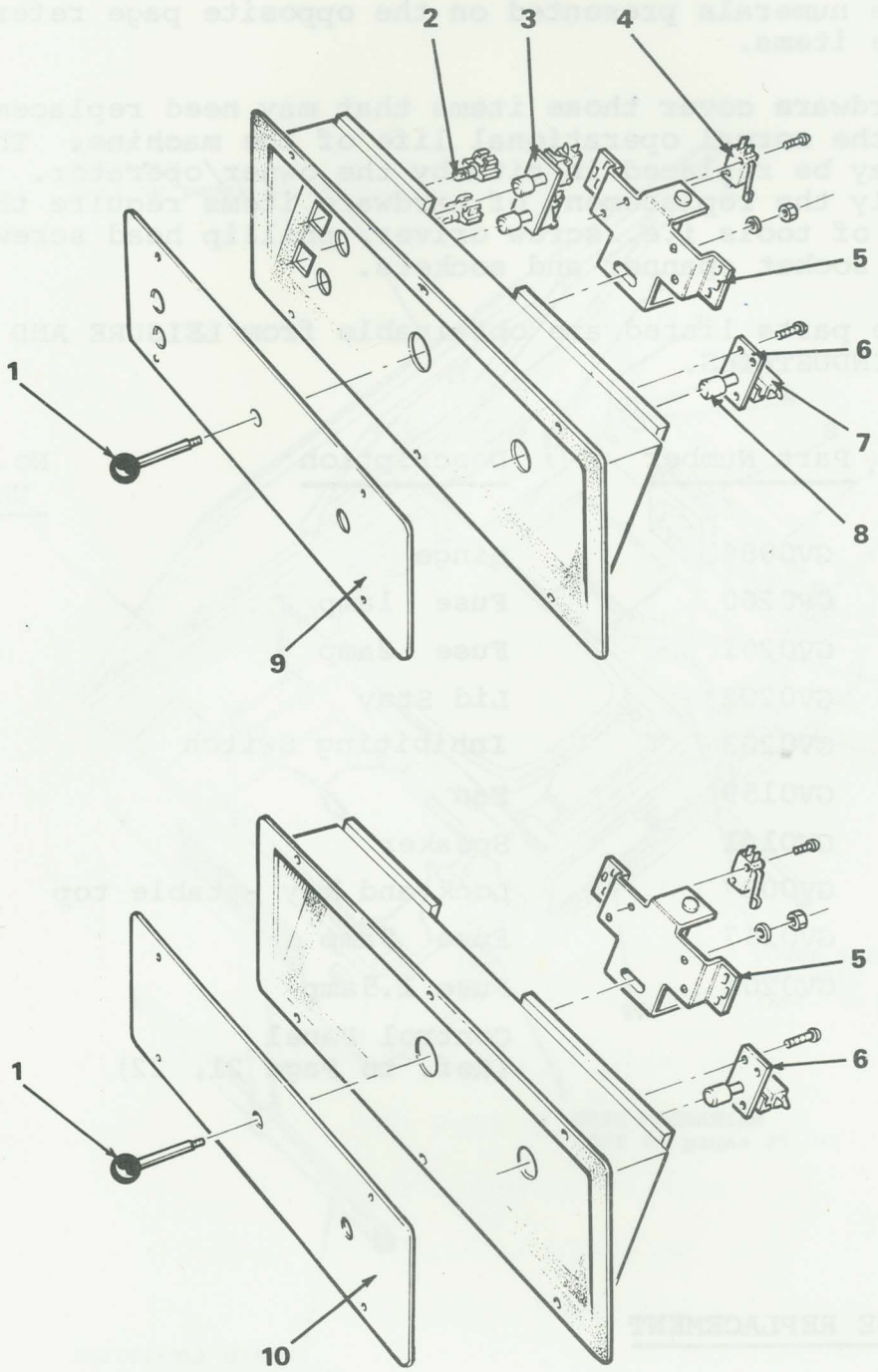

fig.9

CONTROL PANEL ASSEMBLIES

Item	Part Number	Description	No. Per Unit
1	GV0093	Control Lever Knob	1
2	GV0224	Lamp 18V	2
3	GV0205	Push Button Bracket-2 Player	1
4	GV0098	Microswitch - Control Lever	2
5	GV0206	Control Lever Assembly	2
6	GV0207	Bracket - Missile Firing	2
7	GV0165	Microswitch	4
8	GV0208	Push Button - Yellow	4
9	GV0209	Control Panel-2 Player	1
10	GV0210	Control Panel-1 Player	1

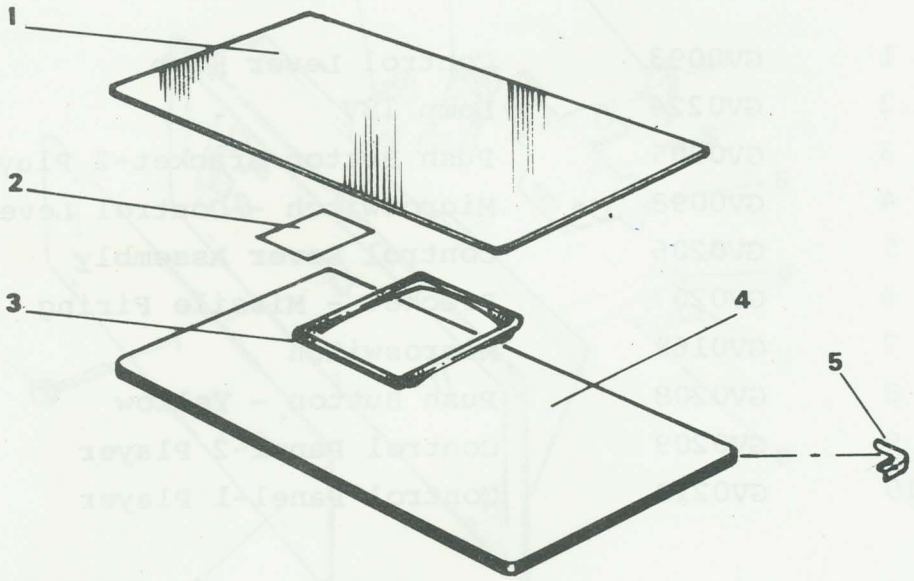

fig.10

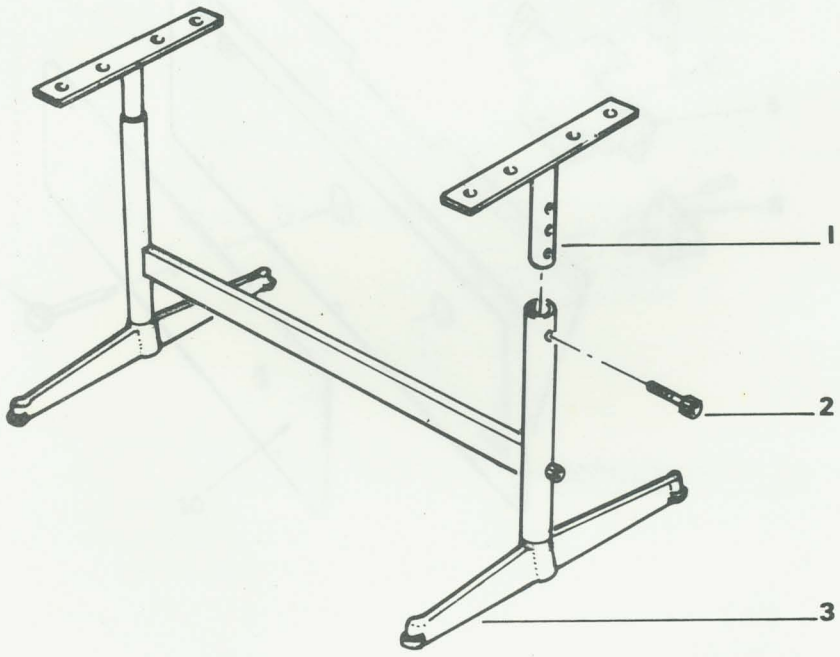

fig.11

PARTS CATALOGUE

TOP ASSEMBLY

Item	Part Number	Description	No. Per Unit
1	GV0211	Glass Top	1
2	GV0212	Game Instruction	2
3	GV0213	Monitor Mask	1
4	GV0214	Table Top	1
5	GV0215	Retainers - Glass Top	4

ADJUSTABLE STAND

Item	Part Number	Description	No. Per Unit
1	GV0216	Leg Adjuster	2
2	GV0217	Leg Bolt	2
3	GV0218	Stand Base	1

ADJUSTING THE STAND

This cocktail table is designed to be operated at three adjustable heights. The table may be set at the following heights, as measured from the base of the stand to the top of the table, 650mm (25 3/4"), 700mm (27 3/4") and 750mm (29 3/4"). To adjust the height, refer to the opposing diagram.

PARTS CATALOGUE

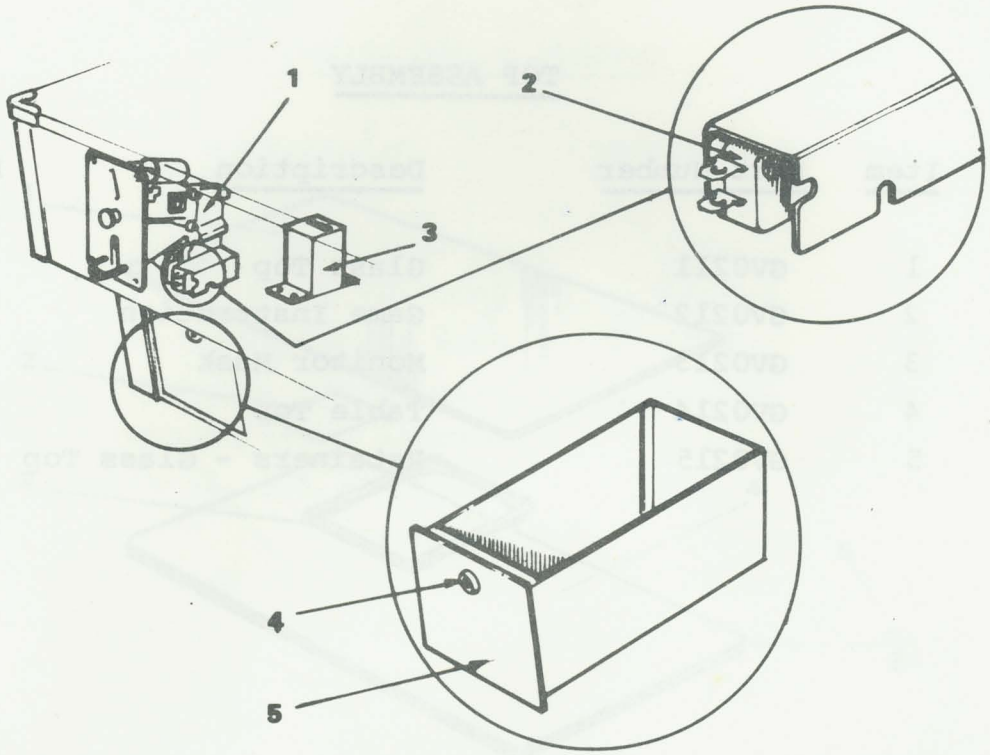

fig. 12

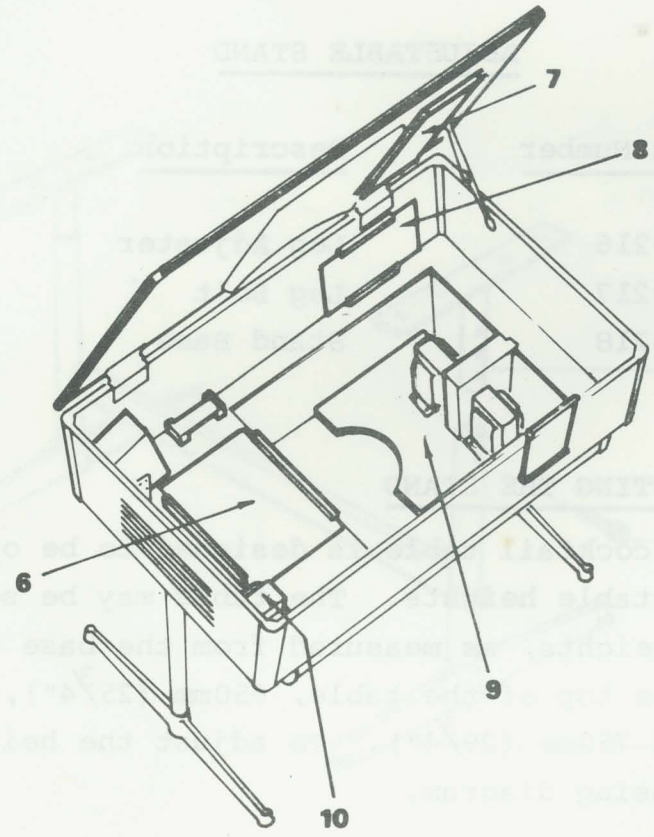

fig. 13

CASH BOX and COIN MECHANISM

Item	Part Number	Description	No. Per Unit
1	GV0099	Coin Mechanism	1
2	GV0102	Microswitch - Coin Counter	1
3	GV0108	Playmeter	1
4	GV0186	Lock - Cash Box	1
5	GV0219	Cash Box	1

P.C. BOARDS

Item	Part Number	Description	No. Per Unit
6	GV0220	Monitor P.C. Board Display Adjustment	1
7	GV0221	Logic P.C. Board (M10) Game	1
8	GV0222	Logic P.C. Board - Power Supply	1
9	GV0223	Monitor P.C. Board - Power Supply	1
10	GV0154	Step-Down Transformer	1

THIS PAGE HAS BEEN LEFT BLANK INTENTIONALLY

SECTION C

C

TECHNICAL DETAILS

It is advised that anybody using SECTION C for repairing or modifying any of the components of the SPACE INVADER should be a qualified technician having a basic knowledge of digital electronics, integrated circuits and electricity.

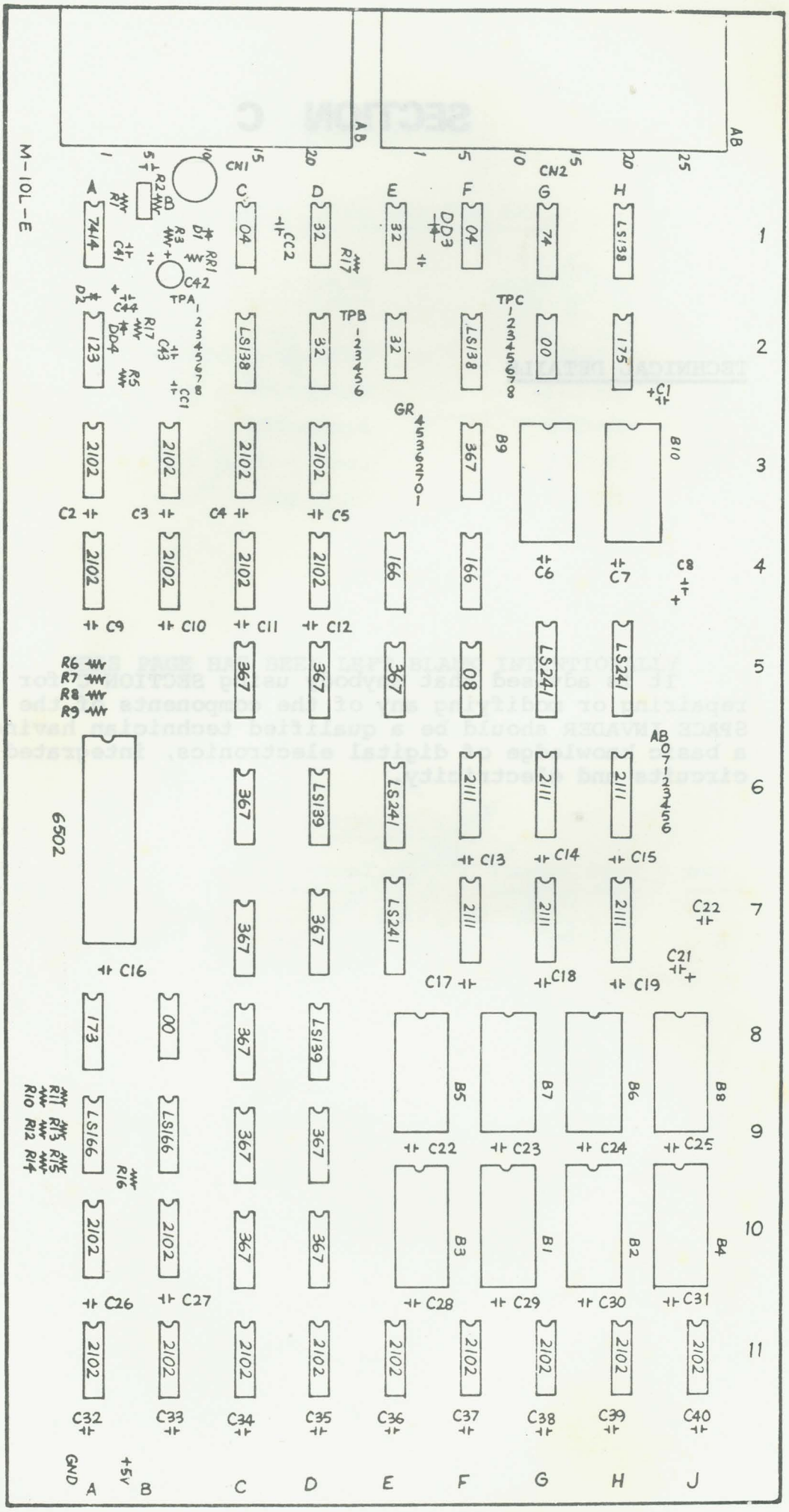
M-10L-E
AB
CN1
CN2
TPA
TPB
TPC
GR
6502
GND
+5V
A
B
C
D
E
F
G
H
J
1
2
3
4
5
6
7
8
9
10
11

M10

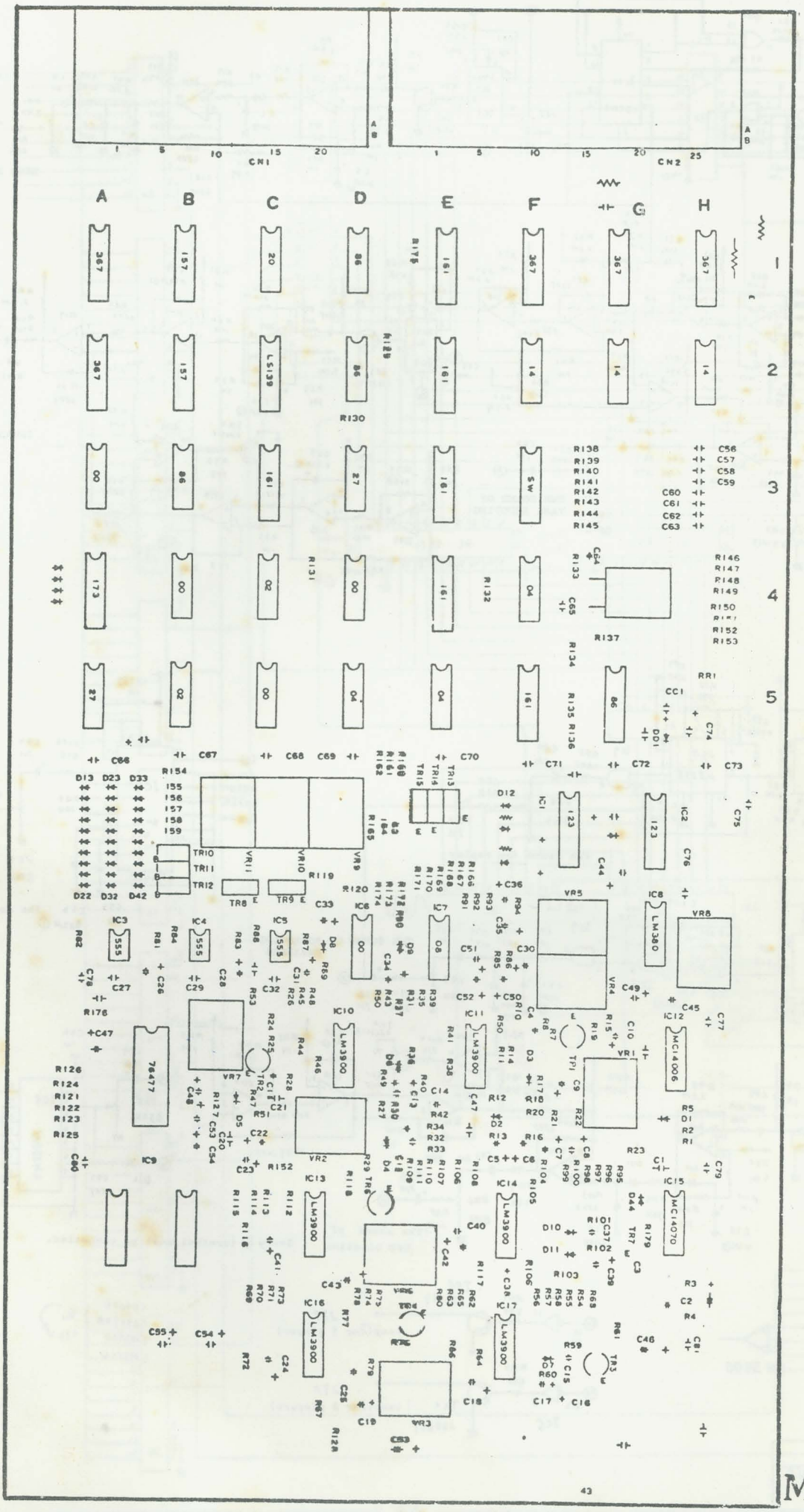

M-10S-E

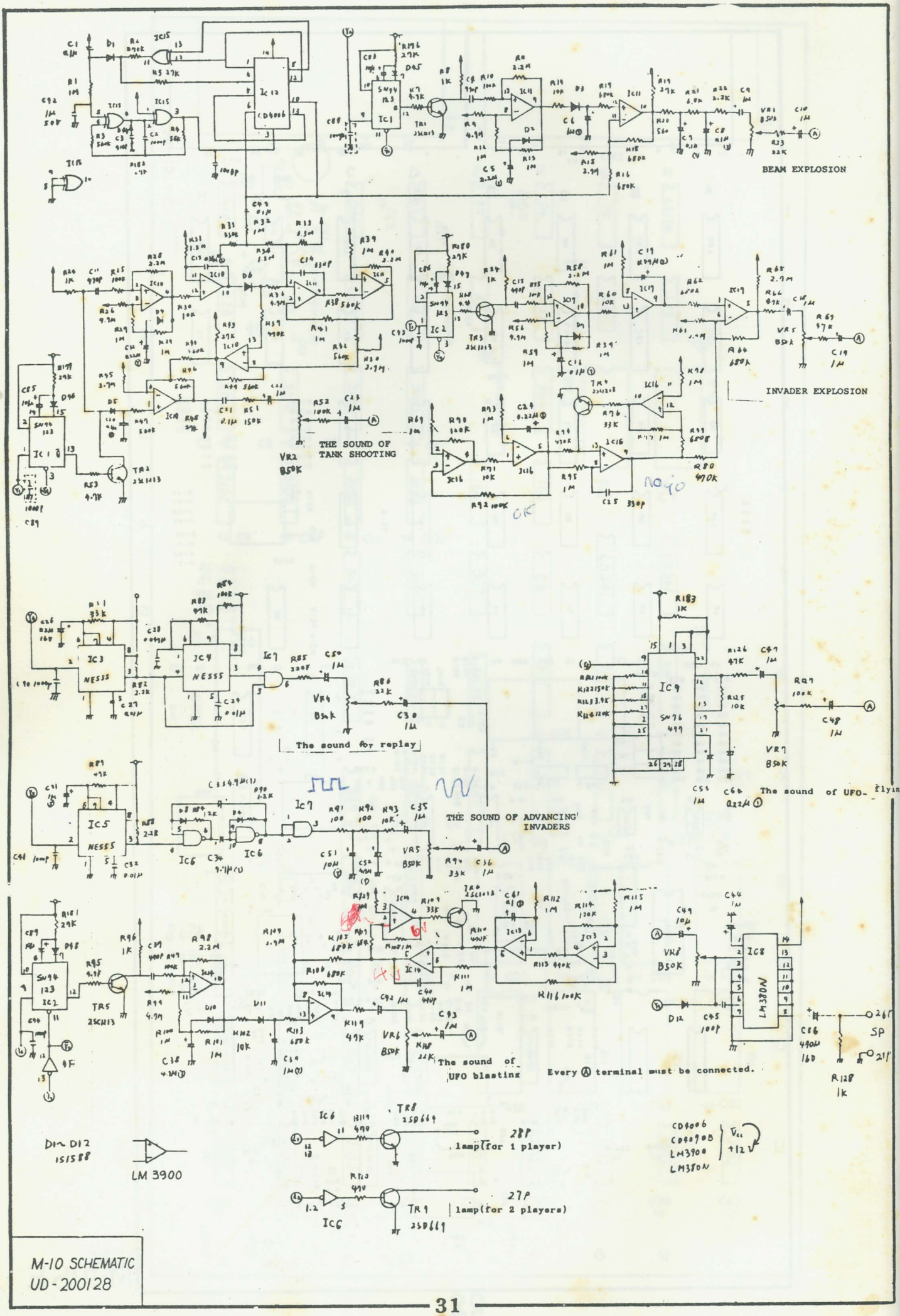
BEAM EXPLOSION
INVADER EXPLOSION
THE SOUND OF TANK SHOOTING
The sound for replay
THE SOUND OF ADVANCING INVADERS
The sound of UFO flying
The sound of UFO blasting
Every Ⓐ terminal must be connected.
LM 3900
lamp(for 1 player)
lamp(for 2 players)
M-10 SCHEMATIC
UD-200128

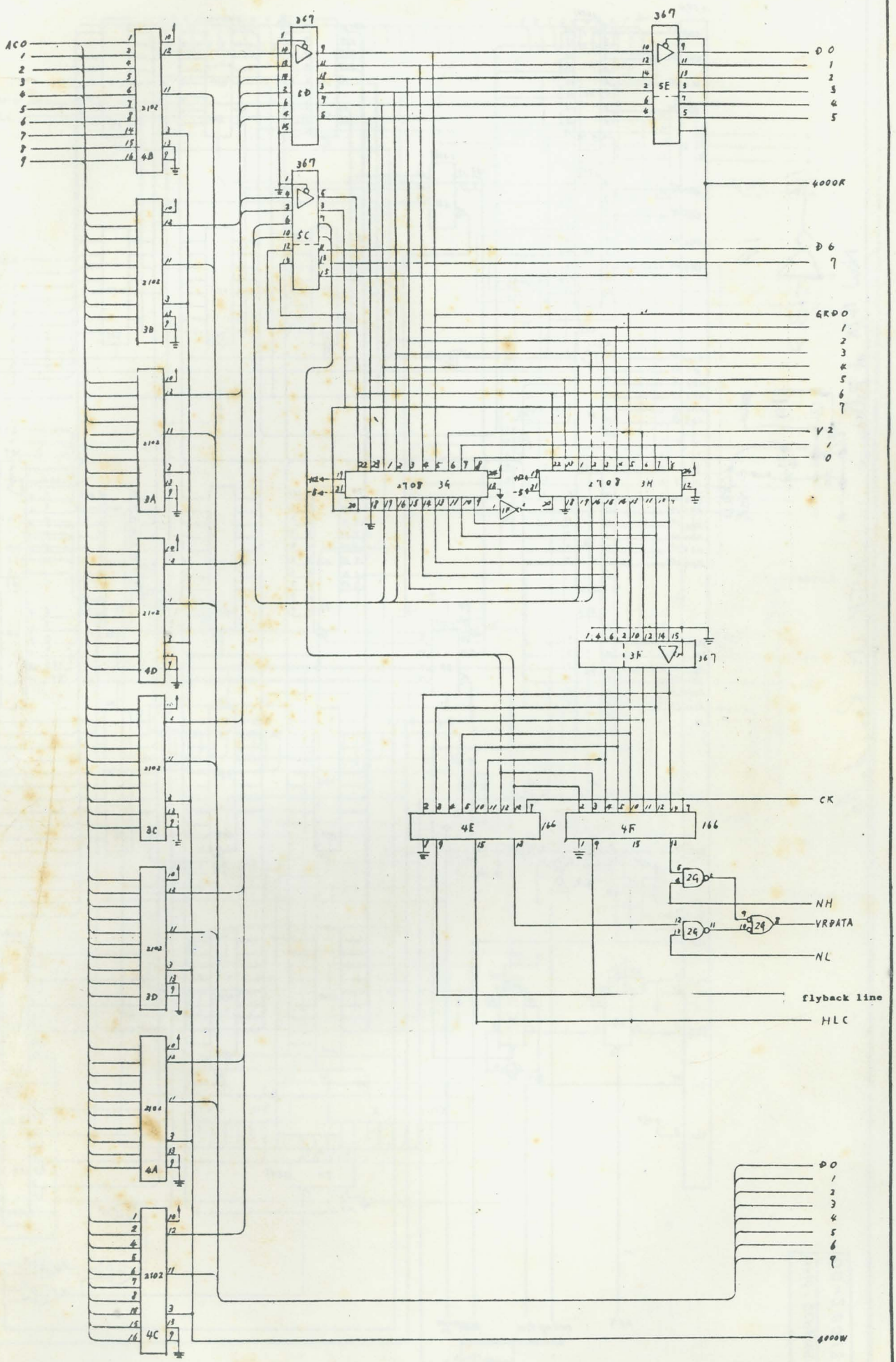

M-10 SCHEMATIC

UD-200129

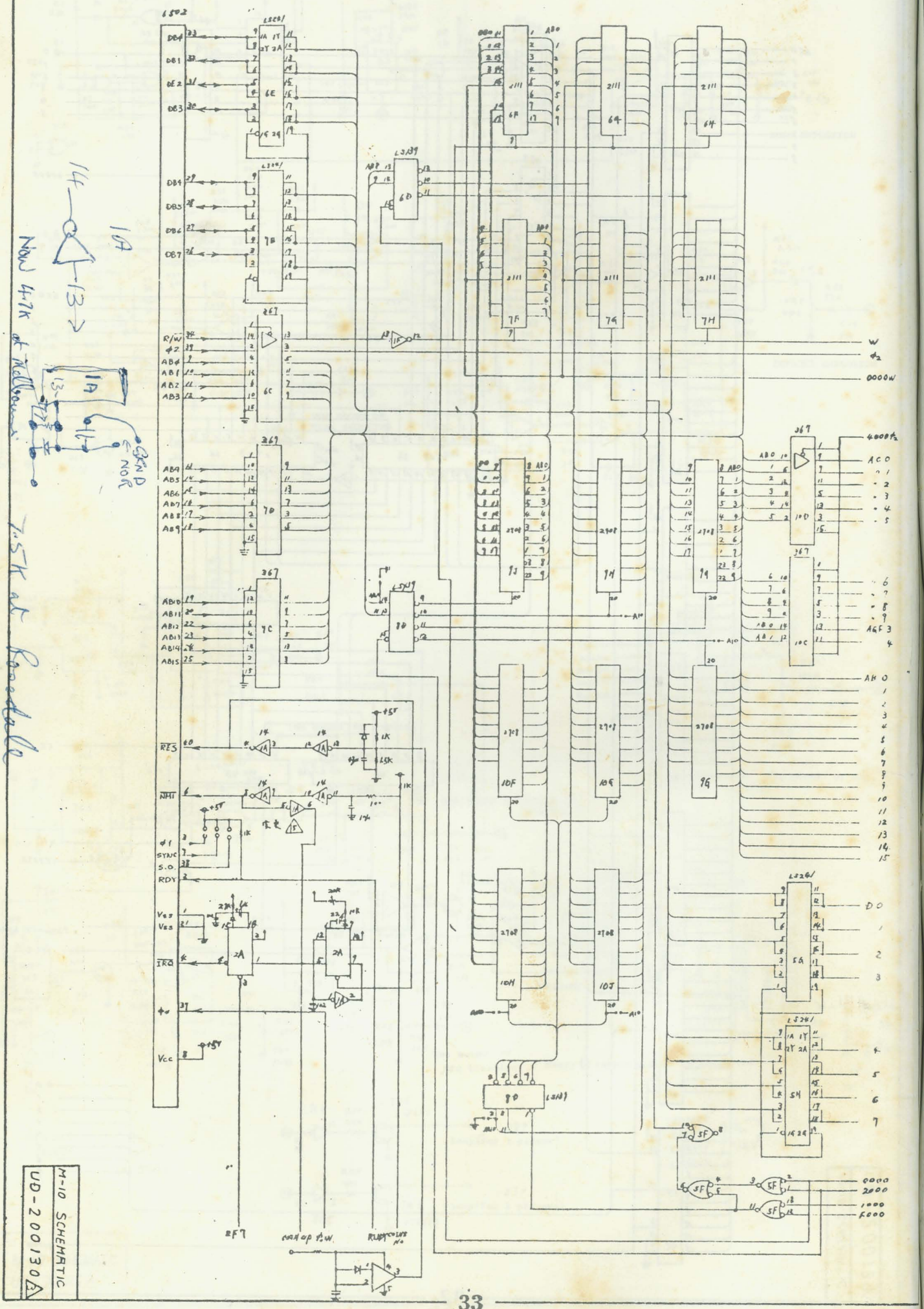
M-10 SCHEMATIC
UD-200130
Now 4.7K at Melbourne
7.5K at Rosedale
1A
GND
NOR
6502
DB4
DB1
DE2
DB3
DB4
DB5
DB6
DB7
R/W
AB4
AB1
AB2
AB3
AB4
AB5
AB6
AB7
AB8
AB9
AB10
AB11
AB12
AB13
AB14
AB15
RES
NMI
SYNC
S.O.
RDY
Vss
IRQ
Vcc
2111
2708
2A
5F
W
0000W
4000
AC0
AGF
AB0
D0
0000
2000
1000
F000

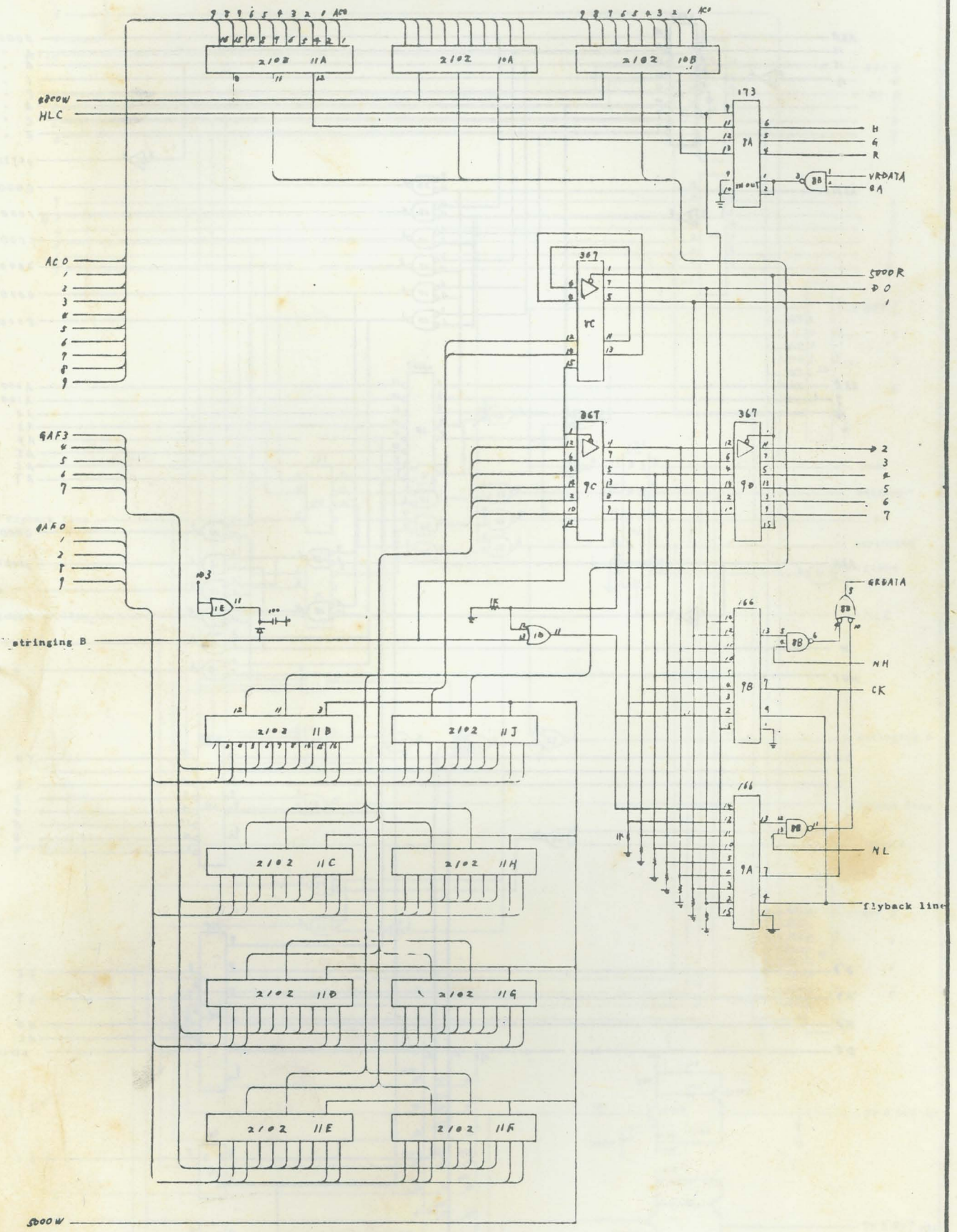

M-10 SCHEMATIC
UD-200131A

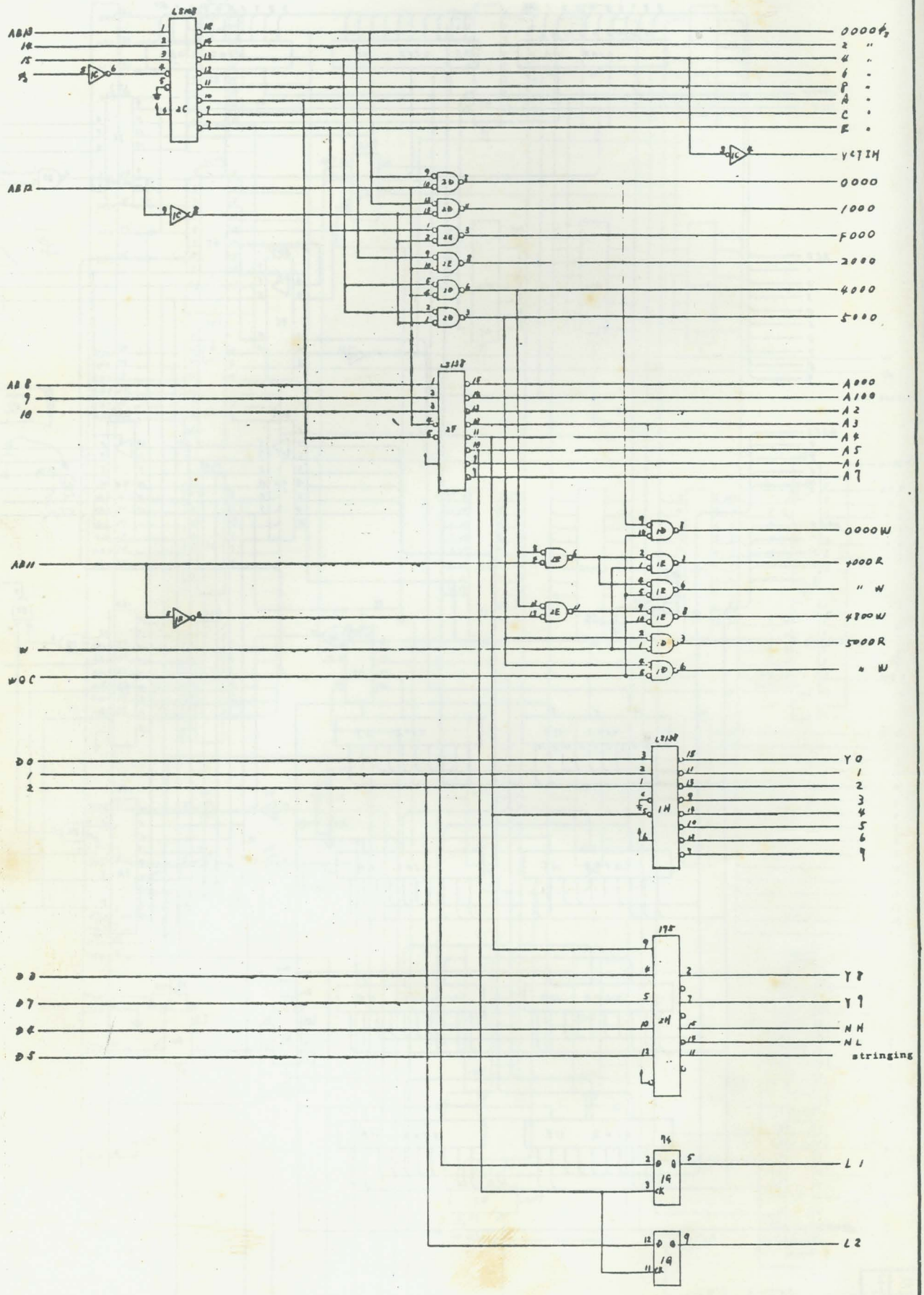
M-10 SCHEMATIC
UD-200132

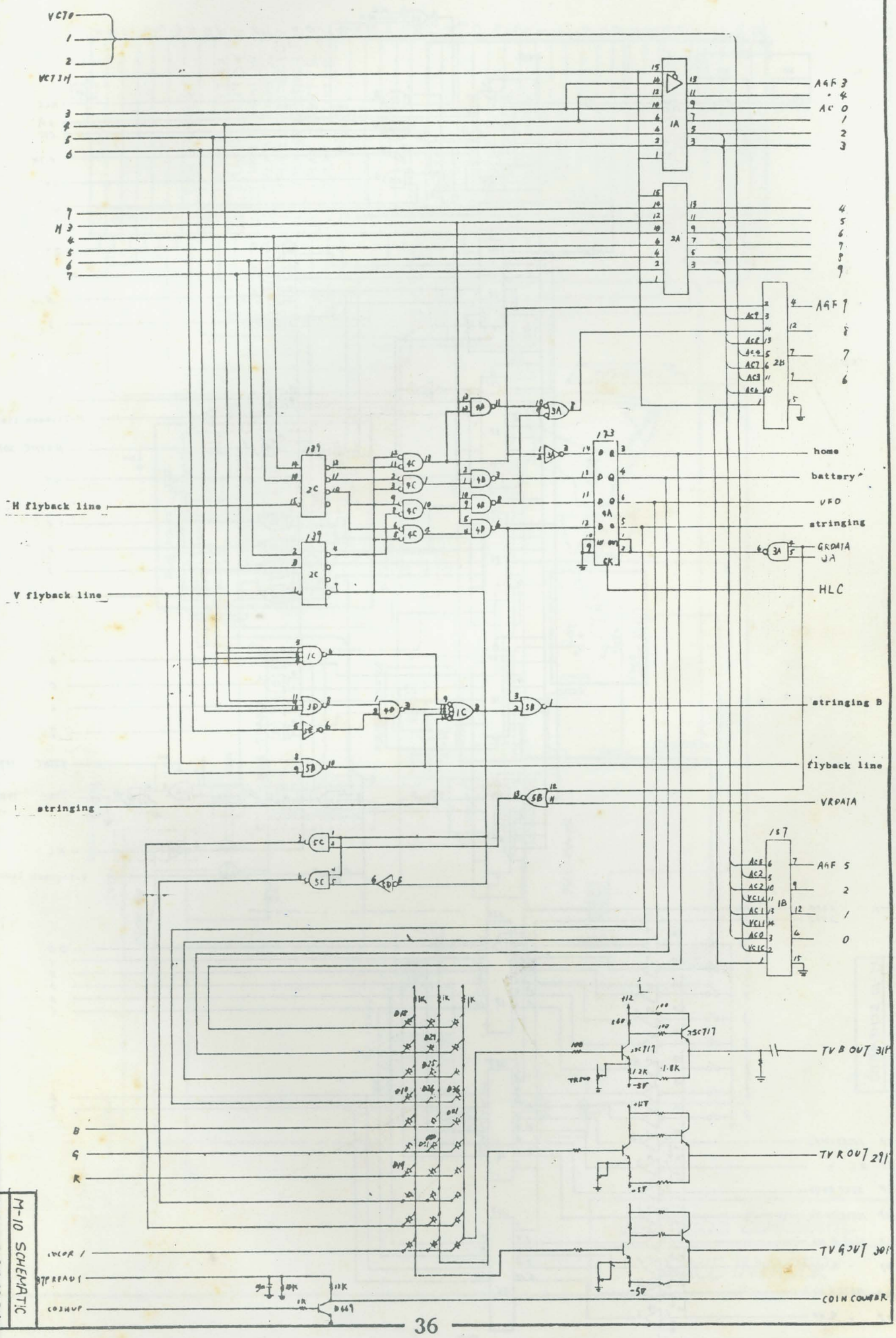
H flyback line
V flyback line
stringing
home
battery
VFD
stringing
GRDATA
HLC
stringing B
flyback line
VRDATA
TV B OUT
TV R OUT
TV G OUT
COIN COUNTER
M-10 SCHEMATIC
UG-2001333

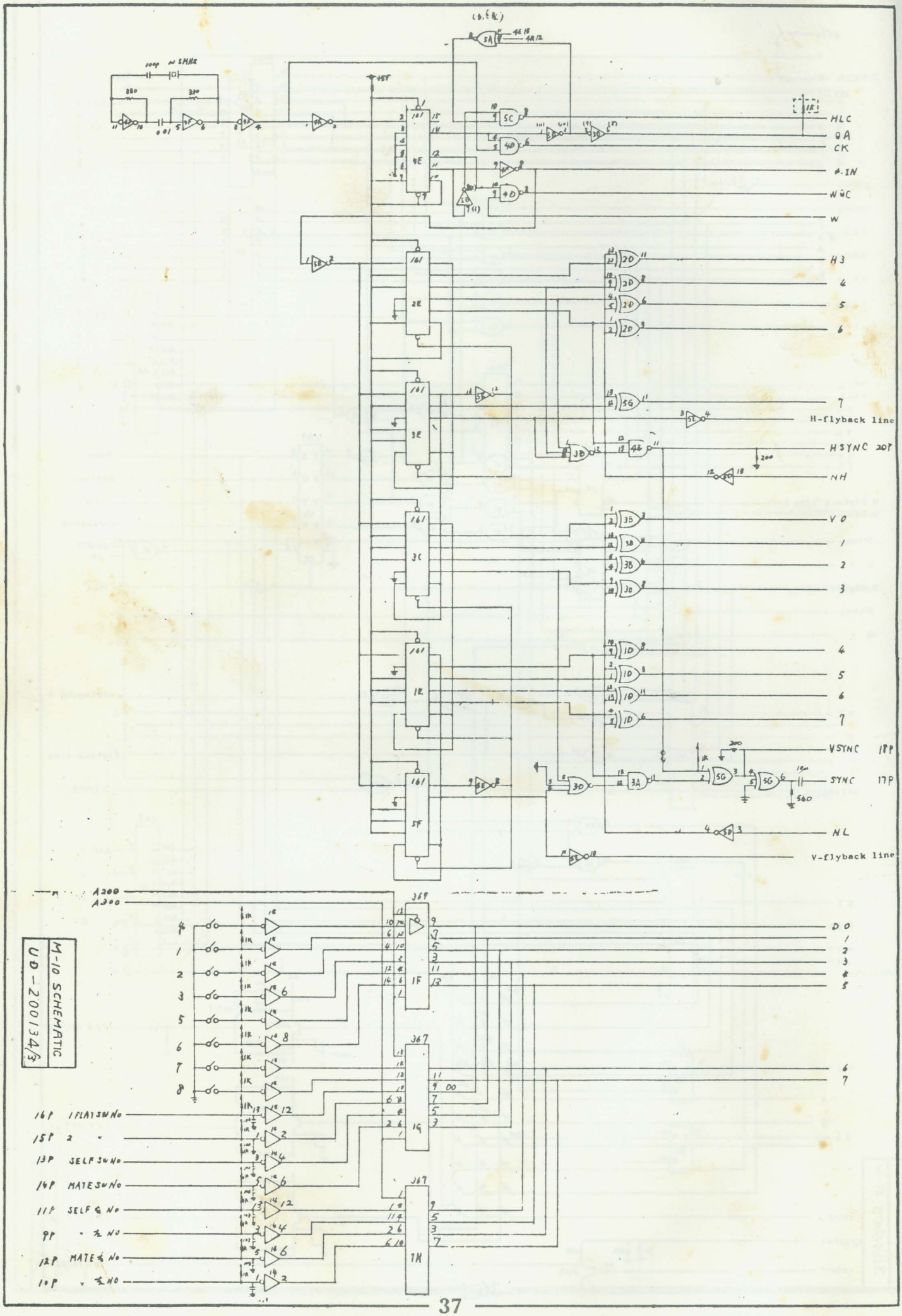
M-10 SCHEMATIC
UD-2001343
HLC
QA
CK
A-IN
WUC
W
H3
4
5
6
7
H-flyback line
HSYNC 20P
NH
V0
1
2
3
4
5
6
7
VSYNC 18P
SYNC 17P
NL
V-flyback line
A200
A300
D0
1
2
3
4
5
6
7
16P 1PLAYSWNo
15P 2 "
13P SELFSWNo
14P MATESWNo
11P SELF"No
9P "No
12P MATE"No
10P "No

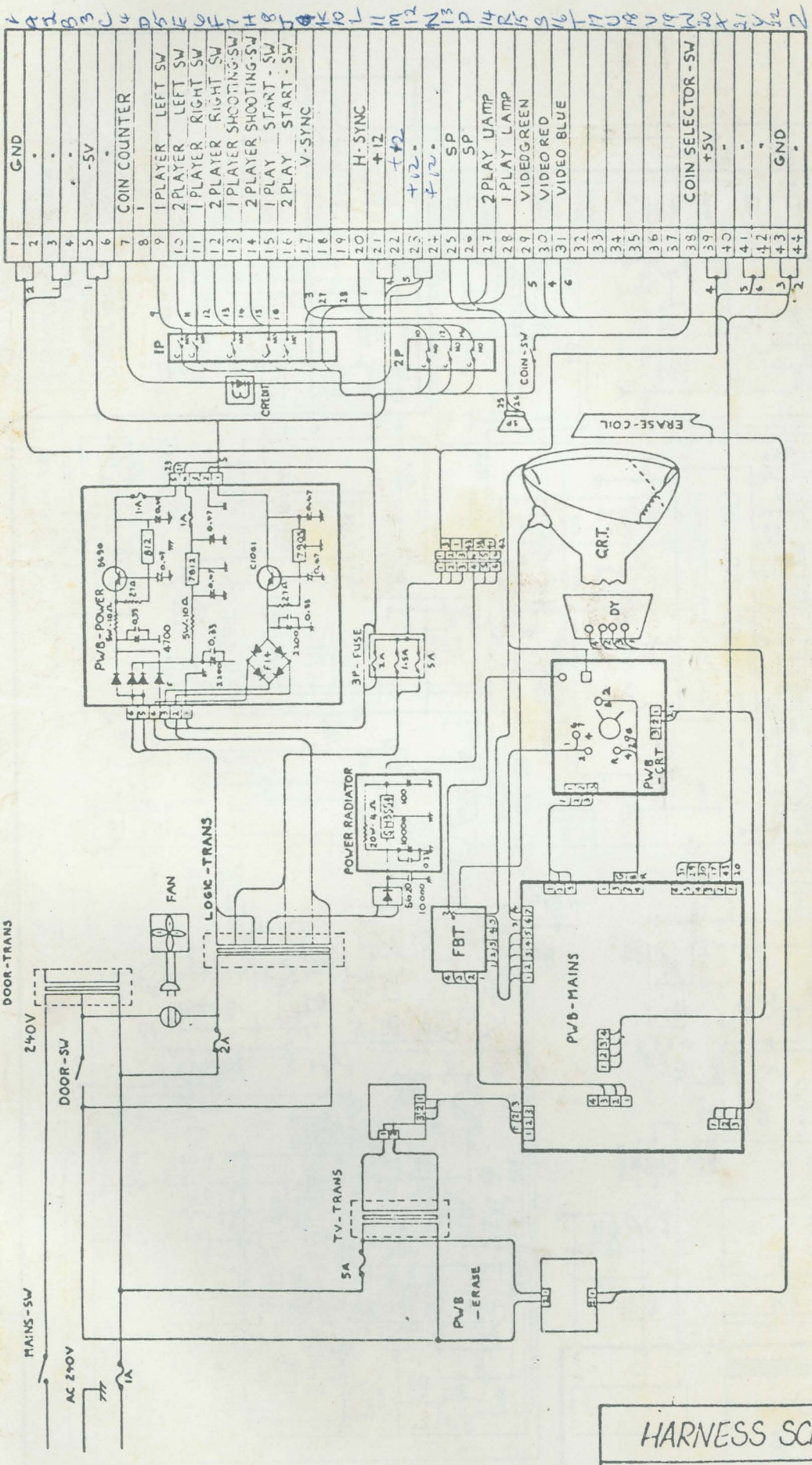

HARNESS SCHEMATIC

SPACE INVADER

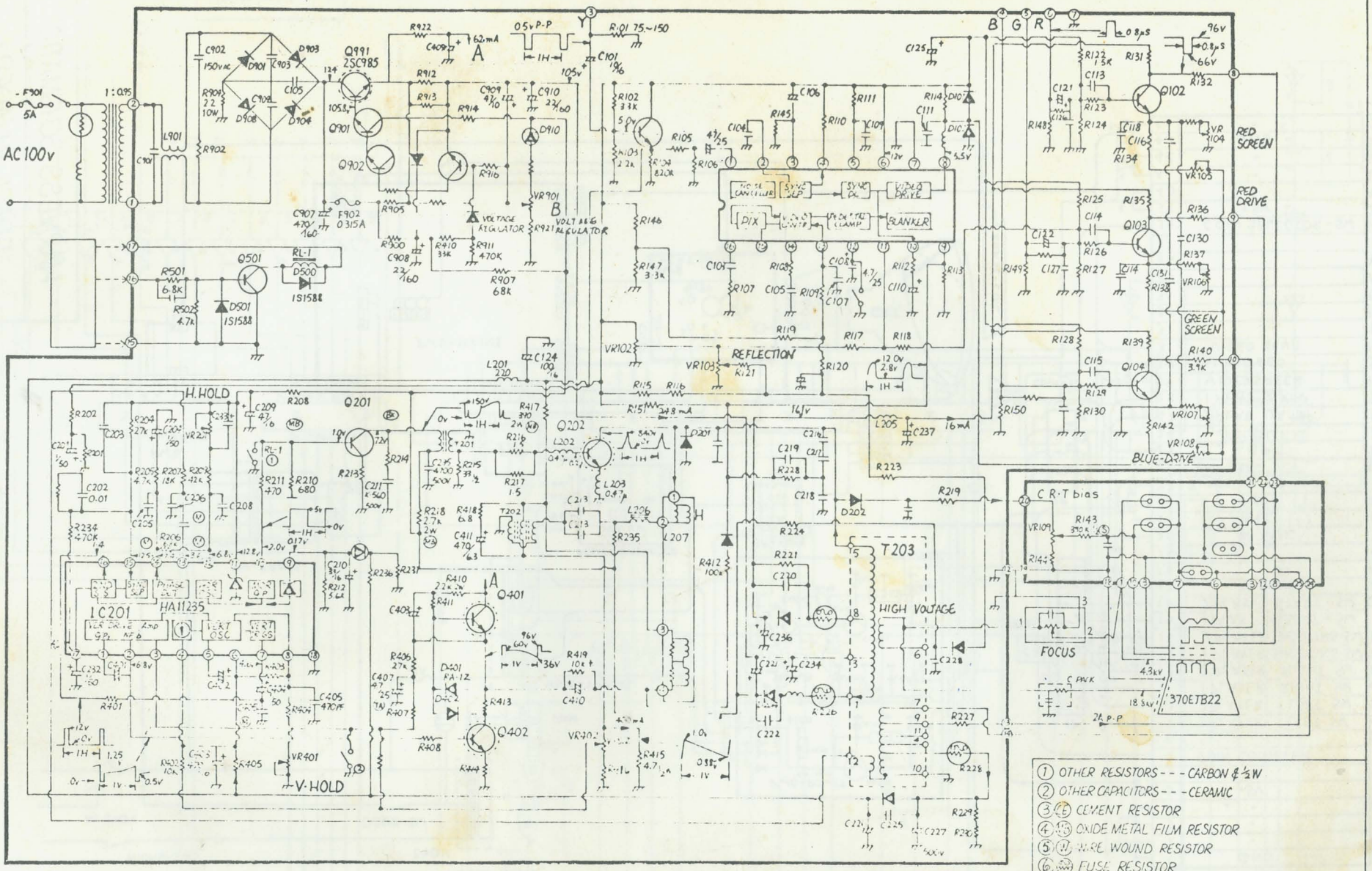

MONITOR CIRCUIT DIAGRAM

(1) OTHER RESISTORS - - - CARBON ¼ W
(2) OTHER CAPACITORS - - - CERAMIC
(3) (CE) CEMENT RESISTOR
(4) (MF) OXIDE METAL FILM RESISTOR
(5) (W) WIRE WOUND RESISTOR
(6) (F) FUSE RESISTOR
(7) (S) SOLID RESISTOR
(8) (M) MICA CAPACITOR
(9) (TA) TANTALUM CAPACITOR
(10) (PF) PLASTIC-FILM CAPACITOR
(11) (PC) DC-PAPER CAPACITOR